# GSTMMBT3906F

## PNP General Purpose Transistor

### Product Description

This device is designed as a general-purpose amplifier and switch.

### Features

- Complementary to GSTMMBT3904
- Collector-emitter voltage $V_{CE}$ = -40V
- Collector current $I_C$ = -200mA
- RoHS Compliant and Halogen Free

### Mechanical Data

- SOT-23 package design
- Epoxy meets UL 94 V-0 Flammability Rating

### Packages & Pin Assignments

| SOT-23 | Equivalent Circuit |
|---|---|
| 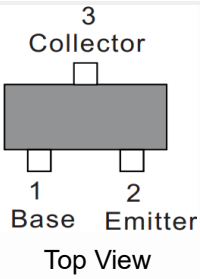  | 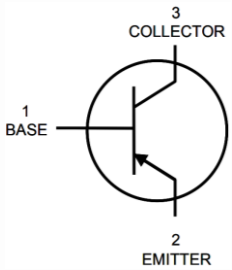  |

| Pin | Description |
|---|---|
| 1 | Base |
| 2 | Emitter |
| 3 | Collector |

## Ordering and Marking Information

| Ordering Information | | | | |
|---|---|---|---|---|
| **Part Number** | **Package** | **$h_{FE}$ Range** | **Marking Code** | **Quantity/Reel** |
| GSTMMBT3906F | SOT-23 | 100-300 | 2A | 3,000 PCS |

**GSTMMBT3906F**

- **Product Code:** GSTMMBT3906
- **Green Level:** **F** for RoHS Compliant and Halogen Free

**Marking Information**

**2A**

- **Product Code:** 2A

## Absolute Maximum Ratings ($T_A$=25°C unless otherwise noted)

| Symbol | Parameter | Value | Unit |
|---|---|---|---|
| $V_{CEO}$ | Collector-Emitter Voltage | -40 | V |
| $V_{CBO}$ | Collector-Base Voltage | -40 | V |
| $V_{EBO}$ | Emitter-Base Voltage | -5 | V |
| $I_C$ | Collector Current | -200 | mA |
| $P_D$ | Power Dissipation $T_A$=25°C✶ | 225 | mW |
| $R_{\Theta JA}$ | Thermal Resistance, Junction to Ambient | 556 | °C/W |
| $T_J$ | Junction Temperature Range | 150 | °C |
| $T_{STG}$ | Storage Temperature Range | -55 to +150 | °C |

✶ Device mounted on an FR4 PCB, single-sided copper, tin-plated and standard footprint.

## Electrical Characteristics ($T_A$=25°C unless otherwise specified)

| Symbol | Description | Conditions | Min | Max | Unit |
|---|---|---|---|---|---|
| $V_{(BR)CEO}$ | Collector-Emitter Breakdown Voltage | $I_C$=-1.0mA, $I_B$=0 | -40 | | V |
| $V_{(BR)CBO}$ | Collector-Base Breakdown Voltage | $I_C$=-10μA, $I_E$=0 | -40 | | V |
| $V_{(BR)EBO}$ | Emitter-Base Breakdown Voltage | $I_E$=-10μA, $I_C$=0 | -5.0 | | V |
| $I_{CBO}$ | Collector-Base Cutoff Current | $V_{CB}$=-40V, $I_E$=0 | | -100 | nA |
| $I_{EBO}$ | Emitter-Base Cutoff Current | $V_{EB}$=-5V, $I_C$=0 | | -100 | nA |
| $I_{BL}$ | Base cutoff current | $V_{CE}$=-30V，$V_{EB}$(off) =-3V | | -50 | nA |
| $I_{CEX}$ | Collector cutoff current | $V_{CE}$=-30V，$V_{EB}$(off)=-3V | | -50 | nA |
| $h_{FE}$ | DC Current Gain | $I_C$=-10mA, $V_{CE}$=-1.0V | 100 | 300 | |
| | | $I_C$=-50mA,$V_{CE}$=-1.0V | 60 | | |
| | | $I_C$=-100mA,$V_{CE}$=-1.0V | 30 | | |
| $V_{CE(sat)}$ | Collector-Emitter Saturation Voltage | $I_C$=-10mA,$I_B$=-1.0mA | | -0.25 | V |
| | | $I_C$=-50mA,$I_B$=-5.0mA | | -0.4 | |
| $V_{BE(sat)}$ | Base-Emitter Saturation Voltage | $I_C$=-10mA,$I_B$=-1.0mA | -0.65 | -0.85 | V |
| | | $I_C$=-50mA,$I_B$=-5.0mA | | -0.95 | |
| $f_T$ | Transition Frequency | $I_C$=-10mA, | 250 | | MHZ |
| $C_{obo}$ | Output Capacitance | $V_{CB}$=-5.0V, $I_E$=0, f=1.0MHz | | 4.5 | PF |
| $C_{ibo}$ | Input Capacitance | $V_{BE}$=-0.5V, $I_C$=0, f=1.0MHz | | 10 | PF |
| NF | Noise Figure | $I_C$=-100μA, $V_{CE}$=-5.0V, | | 4.0 | dB |

## Static Characteristics

| Symbol | Description | Conditions | Min | Max | Unit |
|---|---|---|---|---|---|
| td | Delay Time | $V_{CC}$=-3.0V,$V_{BE}$=-0.5V $I_C$=-10mA,$I_{B1}$=$I_{B2}$=-1.0mA | | 35 | ns |
| tr | Rise Time | | | 35 | ns |
| ts | Storage Time | $V_{CC}$=-3.0V,$I_C$=-10mA $I_{B1}$=$I_{B2}$=-1.0mA | | 225 | ns |
| tf | Fall Time | | | 75 | ns |

## Typical Performance Characteristics ($T_A$=25°C unless otherwise specified)

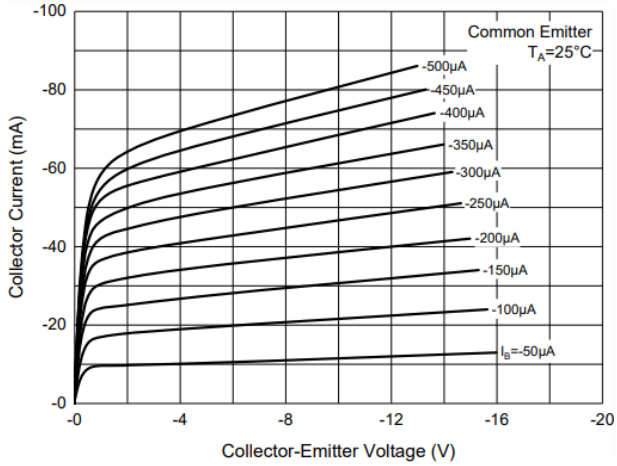


**Figure 1. Static Characteristic**

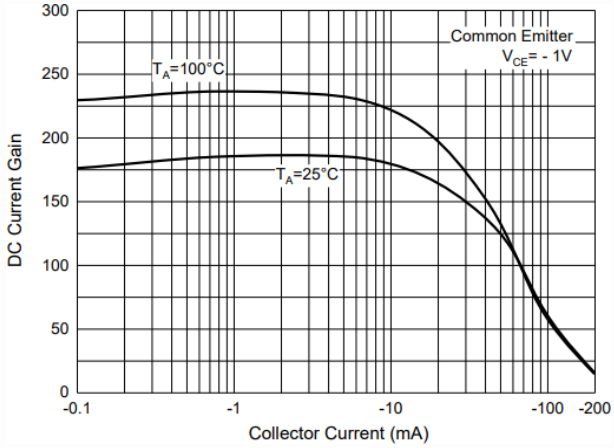


**Figure 2. DC Current Gain Characteristics**

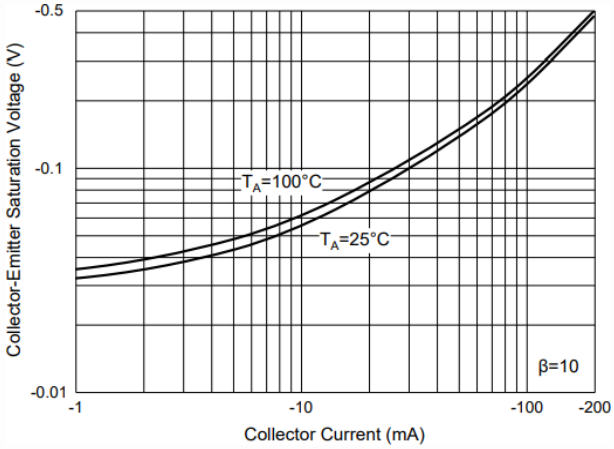


**Figure 3. Collector-Emitter Saturation Voltage Characteristics**

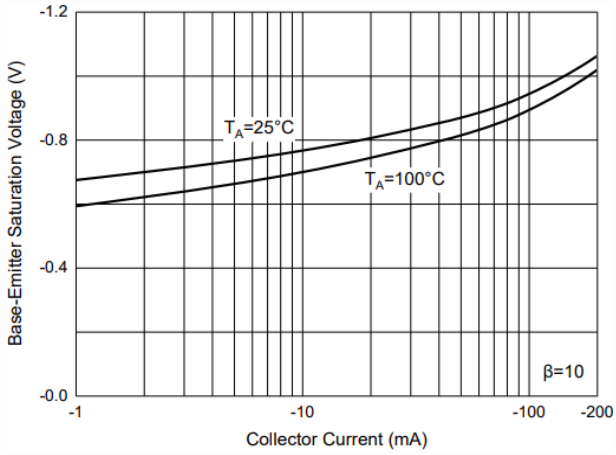


**Figure 4. Base-Emitter Saturation Voltage Characteristics**

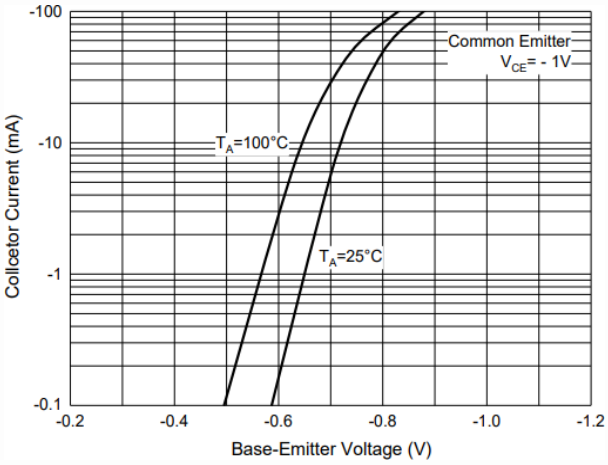


**Figure 5. Base-Emitter Voltage Characteristics**

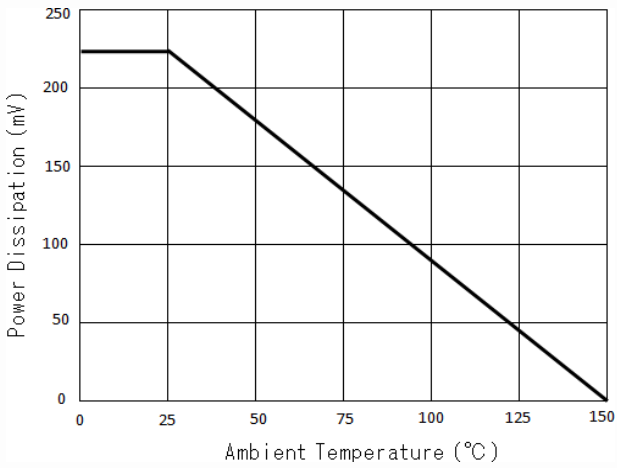


**Figure 6. Collector Power Derating Curve**

# SOT-23

## Package Dimension

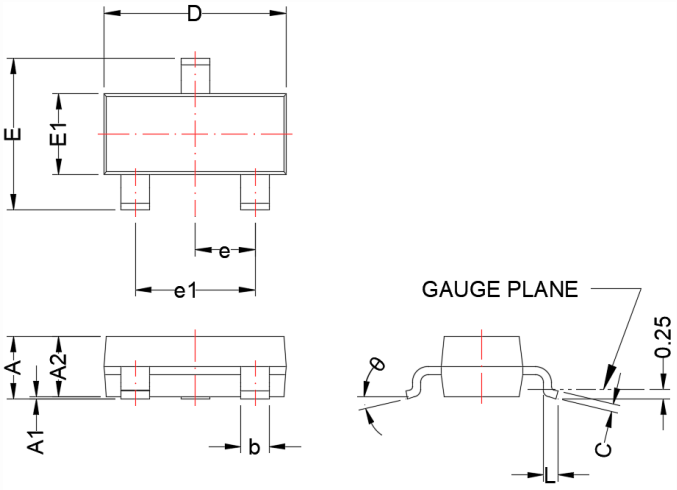


## Recommended Land Pattern

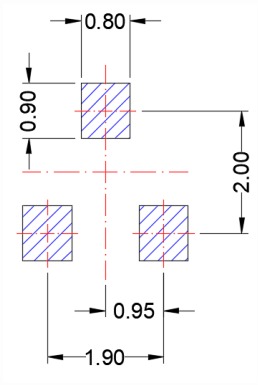


Unit:mm

| Dimensions | | | | |
|---|---|---|---|---|
| Symbol | Millimeters | | Inches | |
| | MIN | MAX | MIN | MAX |
| A | 0.75 | 1.17 | 0.030 | 0.046 |
| A1 | 0.01 | 0.15 | 0.000 | 0.006 |
| A2 | 0.70 | 1.02 | 0.028 | 0.040 |
| b | 0.30 | 0.50 | 0.012 | 0.020 |
| c | 0.08 | 0.20 | 0.003 | 0.008 |
| D | 2.80 | 3.04 | 0.110 | 0.120 |
| E | 2.10 | 2.64 | 0.083 | 0.104 |
| E1 | 1.20 | 1.40 | 0.047 | 0.055 |
| e | 0.95 BSC | | 0.037 BSC | |
| e1 | 1.90 BSC | | 0.075 BSC | |
| L | 0.30 | 0.60 | 0.012 | 0.024 |
| θ | 0º | 8º | 0º | 8º |

**NOTE:**

Dimensions are exclusive of Burrs, Mold Flash & Tie Bar extrusions.

# NOTICE

- Globaltech Semiconductor assumes no responsibility for equipment failures that result from using products at values that exceed, even momentarily, rated values (such as maximum ratings, operating condition ranges, or other parameters) listed in products specifications of any and all Globaltech Semiconductor products described or contained herein. Globaltech Semiconductor products are not designed for use in life support appliances, devices or systems where malfunction of these products can be reasonably expected to result in personal injury. Reproduction in whole or in part is prohibited without the prior written consent of the copyright owner.

- Applications shown on the herein document are examples of standard use and operation. Customers are responsible in comprehending the suitable use in particular applications. Globaltech Semiconductor makes no representation or warranty that such applications will be suitable for the specified use without further testing or modification.

- Information furnished is believed to be accurate and reliable. However Globaltech Semiconductor assumes no responsibility for the consequences of use of such information nor for any infringement of patents or other rights of third parties, which may result from its use. No license is granted by implication or otherwise under any patent or patent rights of Globaltech Semiconductor. Specifications mentioned in this publication are subject to change without notice. This publication supersedes and replaces all information without express written approval of Globaltech Semiconductor.

# CONTACT US


| GS Headquarter | |
|---|---|
| | 4F, NO.43-1, Lane 11, Sec. 6, Minquan E. Rd Neihu District, Taipei City 114761, Taiwan (R.O.C). |
| | 886-2-2657-9980 |
| | 886-2-2657-3630 |
| | sales_twn@gs-power.com |

| RD Division | |
|---|---|
| | 824 Bolton Drive Milpitas. CA. 95035 |
| | 1-408-457-0587 |