GSMDEW2206

20V Dual N-Channel MOSFETs

Product Description

These Dual N-Channel enhancement mode power field effect transistors are using trench DMOS technology. This advanced technology has been especially tailored to minimize on-state resistance, provide superior switching performance, and withstand high energy pulse in the avalanche and commutation mode.

These devices are well suited for high efficiency fast switching applications.

Features

- 20V, 10A, $R_{DS(ON)}$=8.5mΩ@V_{GS}=4.5V
- Improved dv/dt capability
- Fast switching
- Suit for 1.8V Gate Drive Applications
- G-S ESD protection diode embedded
- Green Device Available
- TSSOP-8 package design

Applications

- Notebook
- Load Switch
- LED applications

Packages & Pin Assignments

GSMDEW2206TSSF (TSSOP-8)

Top View

Pin	Description
1	Drain 1/2
2	Source 1
3	Source 1
4	Gate 1
5	Gate 2
6	Source 2
7	Source 2
8	Drain 1/2

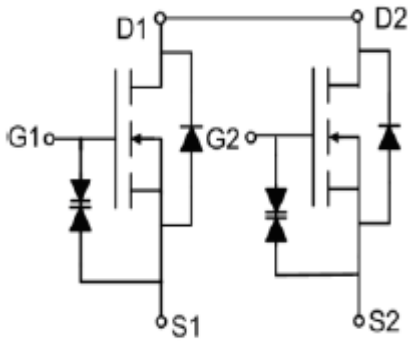

Ordering Information

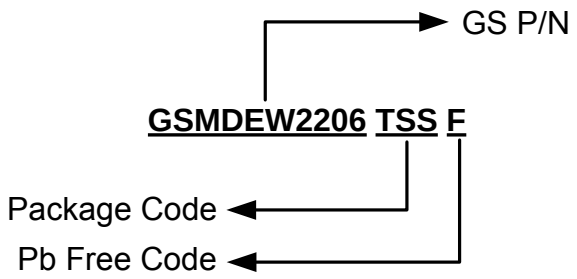

Part Number	Package	Quantity Reel
GSMDEW2206TSSF	TSSOP-8	3000 PCS

Marking Information

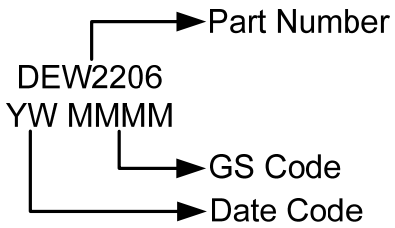

Absolute Maximum Ratings

T_C=25ºC Unless otherwise noted

Symbol	Parameter		Typical	Unit
V_{DS}	Drain-Source Voltage		20	V
V_{GS}	Gate-Source Voltage		±10	V
I_D	Continuous Drain Current	T_C=25℃	10	A
		T_C=100℃	6.3	
I_{DM}	Pulsed Drain Current		40	A
P_D	Power Dissipation (T_C=25℃)		1.25	W
	Power Dissipation (Derate above 25℃)		0.01	W/℃
T_J	Operating Junction Temperature Range		-55 to +150	℃
T_{STG}	Storage Temperature Range		-55 to +150	℃
$R_{\theta JA}$	Thermal Resistance-Junction to Ambient		100	℃/W

Electrical Characteristics

T_J=25℃ Unless otherwise noted

Symbol	Parameter	Conditions	Min	Typ	Max	Unit
Static						
$V_{(BR)DSS}$	Drain-Source Breakdown Voltage	V_{GS}=0V,I_D=250uA	20			V
$\triangle BV_{DSS}/\triangle T_J$	BV_{DSS} Temperature Coefficient	Reference to 25℃, I_D=1mA		0.01		V/℃
$V_{GS(th)}$	Gate Threshold Voltage	V_{DS}=V_{GS},I_D=250uA	0.3	0.6	1	V
$\triangle V_{GS(th)}$	$V_{GS(th)}$ Temperature Coefficient			2		mV/℃
I_{GSS}	Gate Leakage Current	V_{DS}=0V,V_{GS}=±10V			±100	nA
I_{DSS}	Zero Gate Voltage Drain Current	V_{DS}=20V,V_{GS}=0V			1	uA
		V_{DS}=16V,V_{GS}=0V, T_J=125℃			10	
I_S	Continuous Source Current	V_G=V_D=0V, Force Current			10	A
I_{SM}	Pulsed Source Current				40	
$R_{DS(on)}$	Drain-Source On-Resistance	V_{GS}=4.5V,I_D=6A		7.2	8.5	mΩ
		V_{GS}=2.5V,I_D=4A		7.8	9.5	
		V_{GS}=1.8V,I_D=2A		8.6	11	
g_{FS}	Forward Transconductance	V_{DS}=10V,I_S=5A		20		S
V_{SD}	Diode Forward Voltage	V_{GS}=0V,I_S=1A			1	V
Dynamic						
Q_g	Total Gate Charge	V_{DS}=10V,V_{GS}=4.5V, I_D=6A		29.8	45	nC
Q_{gs}	Gate-Source Charge			2.7	6	
Q_{gd}	Gate-Drain Charge			9	14	
C_{iss}	Input Capacitance	V_{DS}=10V,V_{GS}=0V, f=1MHz		1920	2790	pF
C_{oss}	Output Capacitance			280	410	
C_{rss}	Reverse Transfer Capacitance			180	270	
$t_{d(on)}$	Turn-On Time	V_{DD}=10V,I_D=1A, V_{GS}=4.5V,R_G=25Ω		13.5	26	ns
t_r				29	55	
$t_{d(off)}$	Turn-Off Time			66.9	127	
t_f				19.2	36	

Typical Performance Characteristics

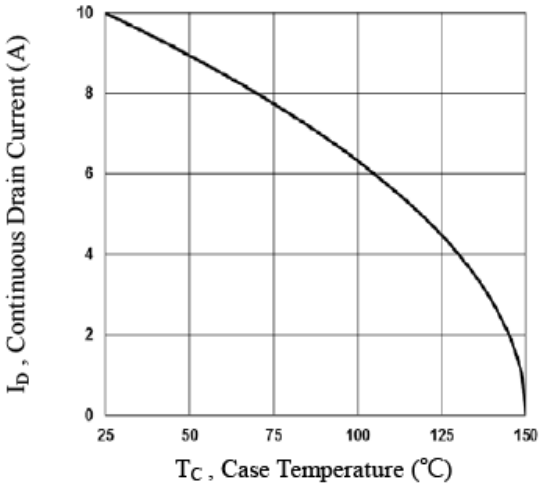

Fig.1 Continuous Drain Current vs. T_c

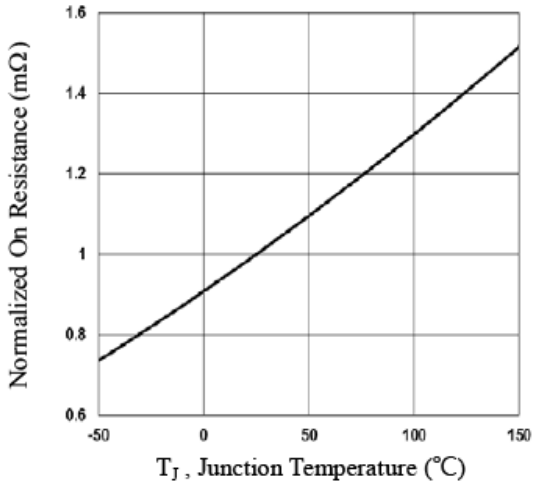

Fig.2 Normalized RDSON vs. T_J

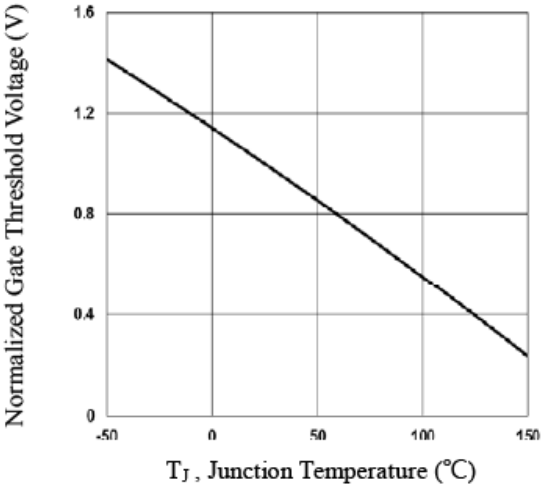

Fig.3 Normalized V_{th} vs. T_J

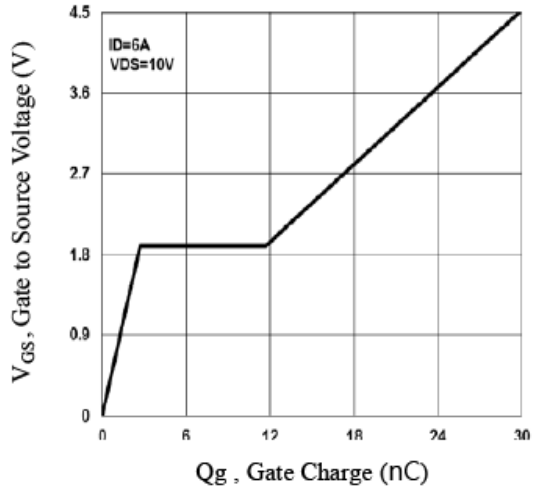

Fig.4 Gate Charge Waveform

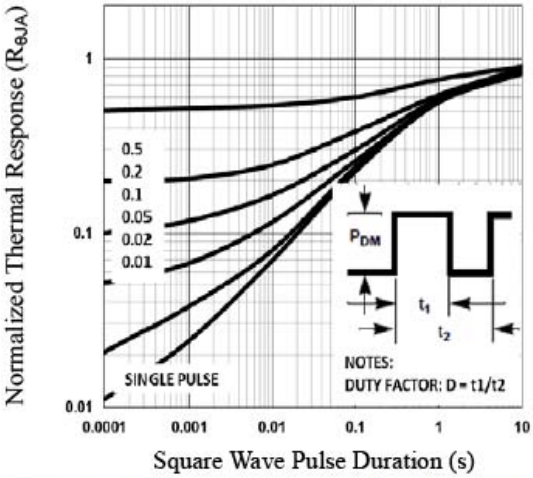

Fig.5 Normalized Transient Impedance

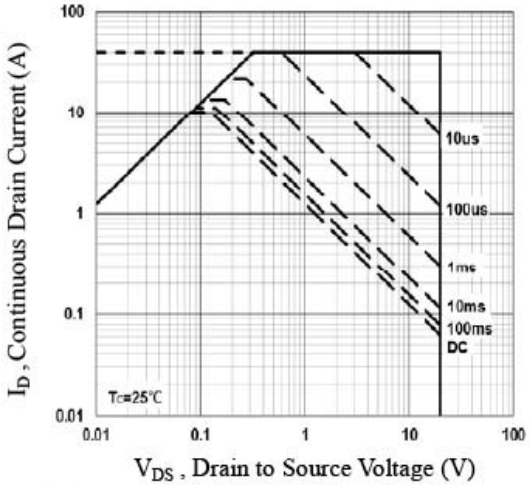

Fig.6 Maximum Safe Operation Area

Typical Performance Characteristics (Continue)

Gate Charge Test Circuit & Waveform

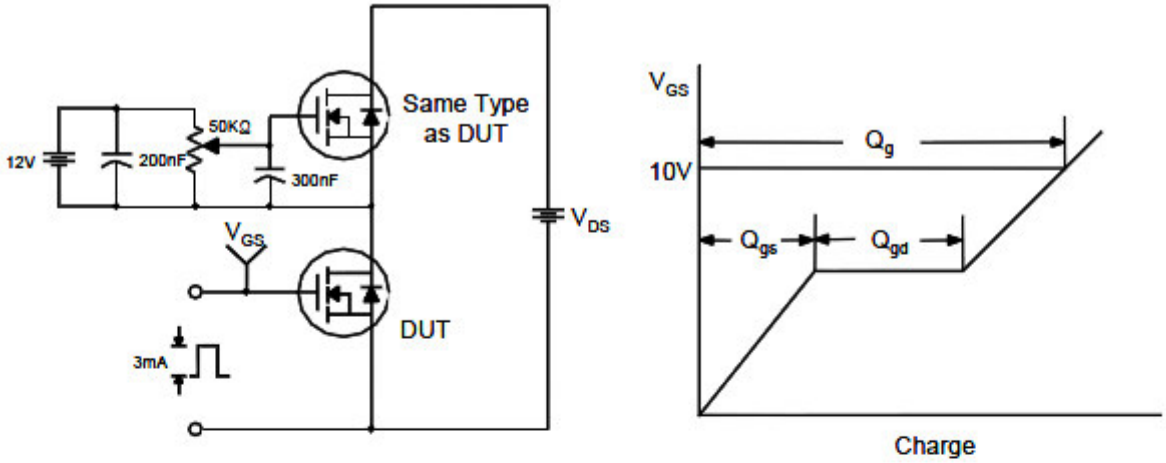

Resistive Switching Test Circuit & Waveforms

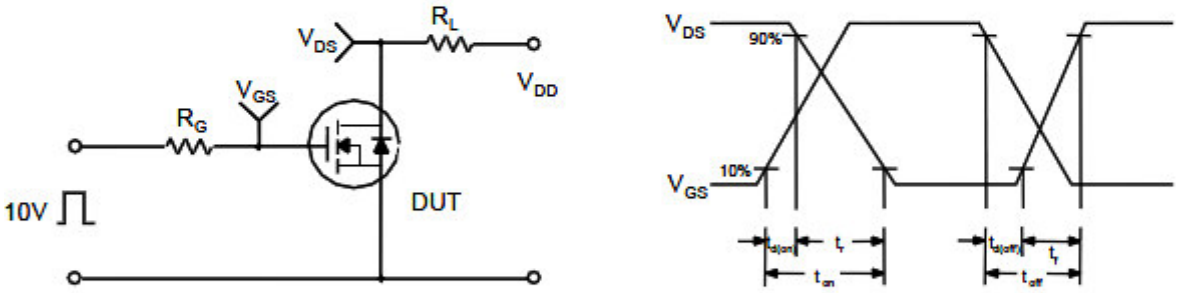

Unclamped Inductive Switching Test Circuit & Waveforms

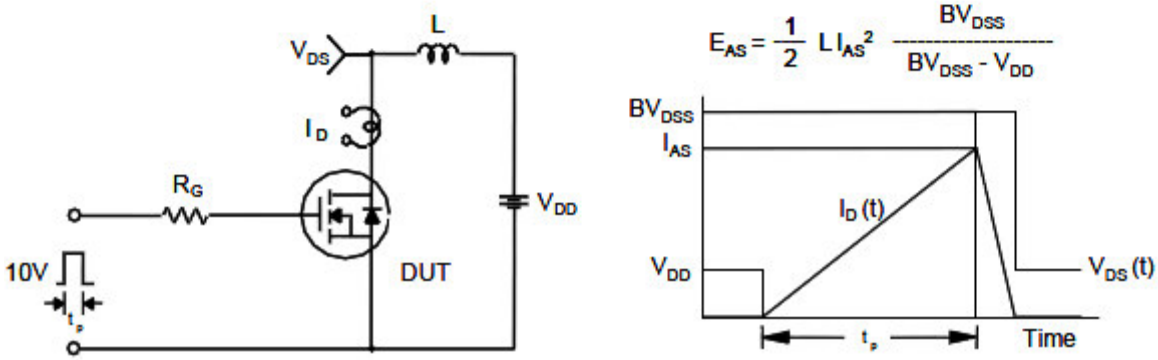

Package Dimension

TSSOP-8

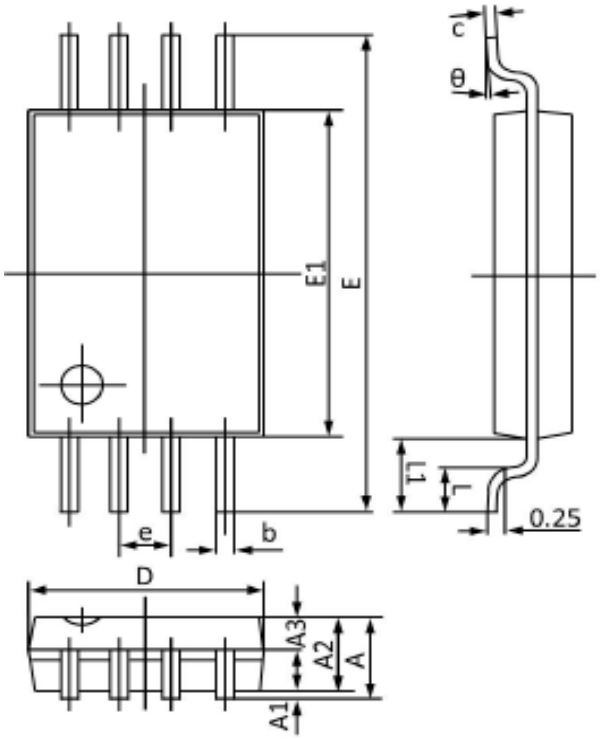

Dimensions				
Symbol	Millimeters		Inches	
	Min	Max	Min	Max
A	1.100	1.200	0.044	0.047
A1	0.050	0.150	0.002	0.006
A2	0.900	1.050	0.036	0.041
A3	0.390	0.490	0.016	0.019
b	0.210	0.300	0.009	0.011
c	0.130	0.190	0.006	0.007
D	0.120	0.140	0.004	0.006
E	6.200	6.600	0.244	0.260
E1	4.300	4.500	0.169	0.177
e	0.650 (BSC)		0.025 (BSC)	
L	0.450	0.750	0.018	0.029
L1	1.000 (BSC)		0.039 (BSC)	
θ	0°	8°	0°	8°

NOTICE

Information furnished is believed to be accurate and reliable. However Globaltech Semiconductor assumes no responsibility for the consequences of use of such information nor for any infringement of patents or other rights of third parties, which may result from its use. No license is granted by implication or otherwise under any patent or patent rights of Globaltech Semiconductor. Specifications mentioned in this publication are subject to change without notice. This publication supersedes and replaces all information without express written approval of Globaltech Semiconductor.

CONTACT US

GS Headquarter	
	4F.,No.43-1,Lane11,Sec.6,Minquan E.Rd Neihu District Taipei City 114, Taiwan (R.O.C)
	886-2-2657-9980
	886-2-2657-3630
	sales_twn@gs-power.com

Shenzhen Branch(China)	
	1113 B Building, Happiness Washington, Baoan Nan Road, Luohu District, Shenzhen City, China
	0755-22208941
	sales_cn@gs-power.com

RD Division	
	824 Bolton Drive Milpitas. CA. 95035
	1-408-457-0587