GSM3415

20V P-Channel Enhancement Mode MOSFET

Product Description

GSM3415, P-Channel enhancement mode MOSFET, uses Advanced Trench Technology to provide excellent $R_{DS(ON)}$,low gate charge.

These devices are particularly suited for low Voltage power management, such as smart Phone and notebook computer and other battery powered circuits, and low in-line power loss are needed in commercial industrial surface mount applications.

Features

- -20V/-4.9A,$R_{DS(ON)}$=45mΩ@V_{GS}=-4.5V
- -20V/-3.4A,$R_{DS(ON)}$=58mΩ@V_{GS}=-2.5V
- -20V/-2.2A,$R_{DS(ON)}$=85mΩ@V_{GS}=-1.8V
- Super high density cell design for extremely low $R_{DS\ (ON)}$
- Exceptional on-resistance and maximum DC current capability

Applications

- Portable Equipment
- Battery Powered System
- Net Working System

Packages & Pin Assignments

GSM3415ZF(SOT-23)

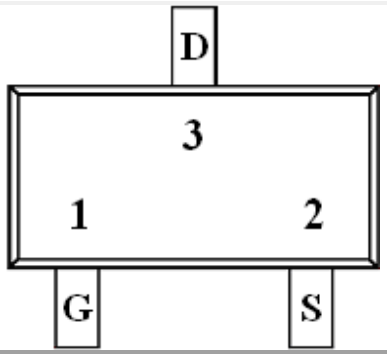

1	Gate
2	Source
3	Drain

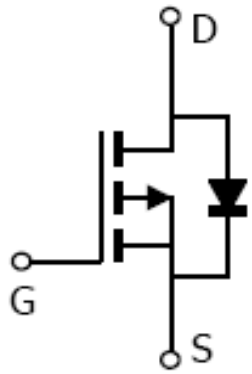

Ordering Information

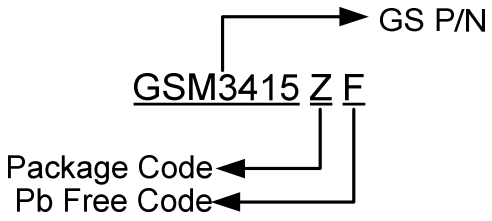

Part Number	Package	Quantity Reel
GSM3415ZF	SOT-23	3000 PCS

Marking Information

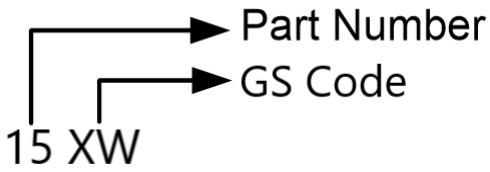

Absolute Maximum Ratings

(T_A=25ºC unless otherwise noted)

Symbol	Parameter		Typical	Unit
V_{DSS}	Drain-Source Voltage		-20	V
V_{GSS}	Gate –Source Voltage		±12	V
I_D	Continuous Drain Current(T_J=150℃)	T_C=25ºC	-4.9	A
		T_C=70ºC	-3.9	
I_{DM}	Pulsed Drain Current		-10	A
I_S	Continuous Source Current(Diode Conduction)		-1.6	A
P_D	Power Dissipation	T_c=25ºC	1.56	W
T_J	Operating Junction Temperature		150	ºC
T_{STG}	Storage Temperature Range		-55/150	ºC
$R_{\theta JA}$	Thermal Resistance-Junction to Ambient		120	ºC/ W

Electrical Characteristics

(T_A=25ºC unless otherwise noted)

Symbol	Parameter	Conditions	Min	Typ	Max	Unit
Static						
$V_{(BR)DSS}$	Drain-Source Breakdown Voltage	V_{GS}=0V,I_D=-250uA	-20			V
$V_{GS(th)}$	Gate Threshold Voltage	V_{DS}=V_{GS},I_D=-250uA	-0.4		-0.9	
I_{GSS}	Gate Leakage Current	V_{DS}=0V,V_{GS}=±12V			±100	nA
I_{DSS}	Zero Gate Voltage Drain Current	V_{DS}=-16V,V_{GS}=0V			-1	uA
		V_{DS}=-16V,V_{GS}=0V T_J=85℃			-10	
$R_{DS(on)}$	Drain-Source On-Resistance	V_{GS} = -4.5V,I_D=-4.9A		40	45	mΩ
		V_{GS} =-2.5V,I_D=-3.4A		50	58	
		V_{GS} =-1.8V,I_D=-2.2A		60	85	
g_{FS}	Forward Transconductance	V_{DS}=-5V,I_D=-3.6A		10		S
V_{SD}	Diode Forward Voltage	I_S=-1.6A,V_{GS}=0V		-0.85	-1.2	V
Dynamic						
Q_g	Total Gate Charge	V_{DS}=-10V,V_{GS}=-2.5V, I_D=-4.0A		10	18	nC
Q_{gs}	Gate-Source Charge			2.5		
Q_{gd}	Gate-Drain Charge			3.5		
C_{iss}	Input Capacitance	V_{DS}=-10V,V_{GS}=0V, f=1MHz		1050		pF
C_{oss}	Output Capacitance			165		
C_{rss}	Reverse Transfer Capacitance			135		
$t_{d(on)}$	Turn-On Time	V_{DD}=-10V,R_L=2.7Ω, I_D=-3.7A,V_{GEN}=-4.5V, R_G=1Ω		15	25	ns
t_r				25	40	
$t_{d(off)}$	Turn-Off Time			40	65	
t_f				15	25	

Typical Performance Characteristics

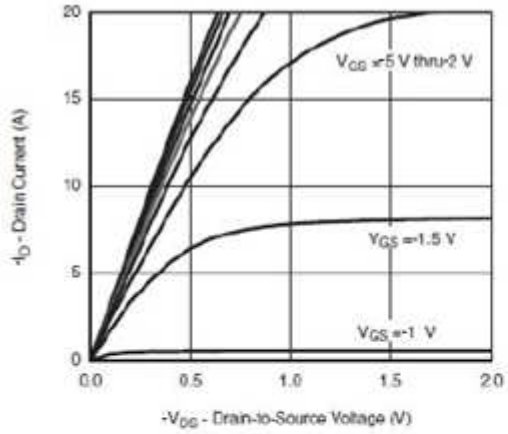

Output Characteristics

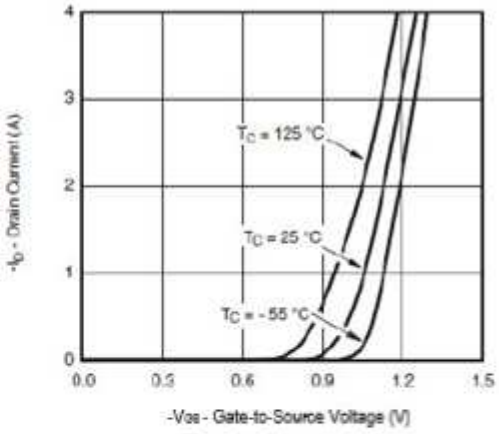

Transfer Characteristics

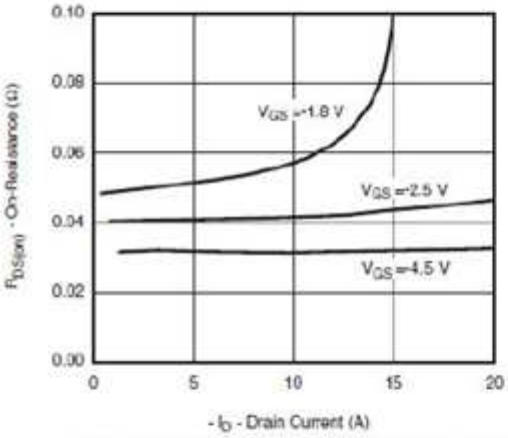

On-Resistance vs. Drain Current and Gate Voltage

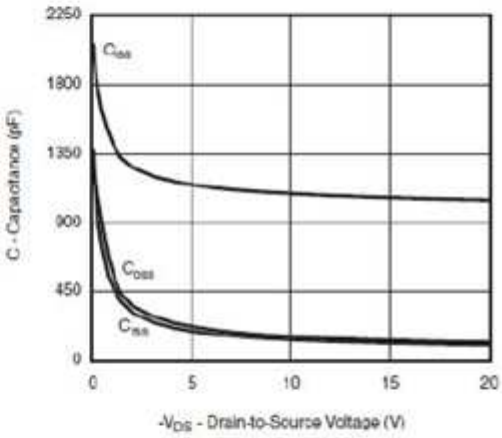

Capacitance

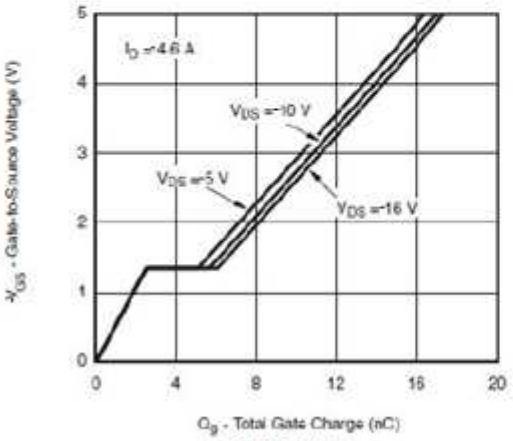

Gate Charge

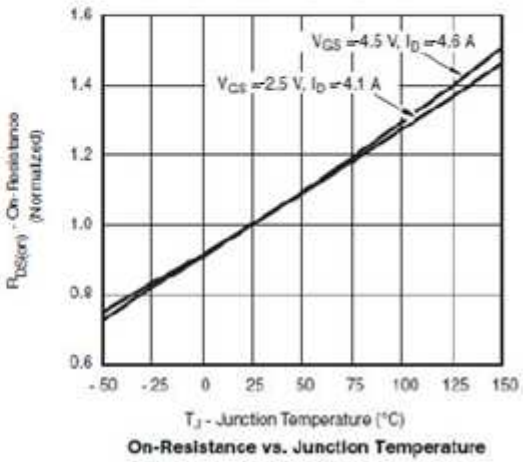

On-Resistance vs. Junction Temperature

Typical Performance Characteristics (continue)

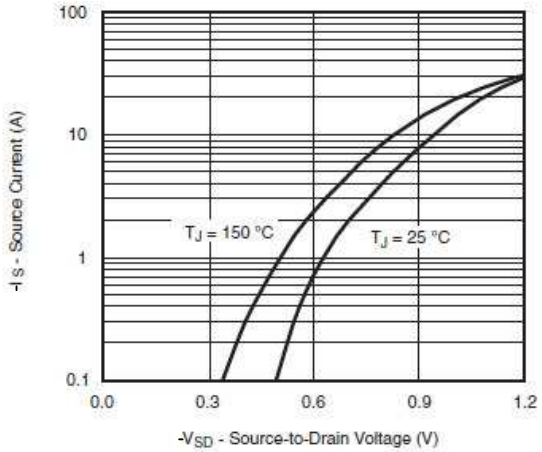

Source-Drain Diode Forward Voltage

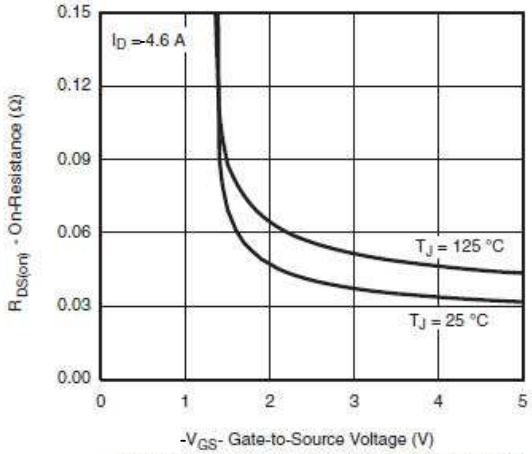

On-Resistance vs. Gate-to-Source Voltage

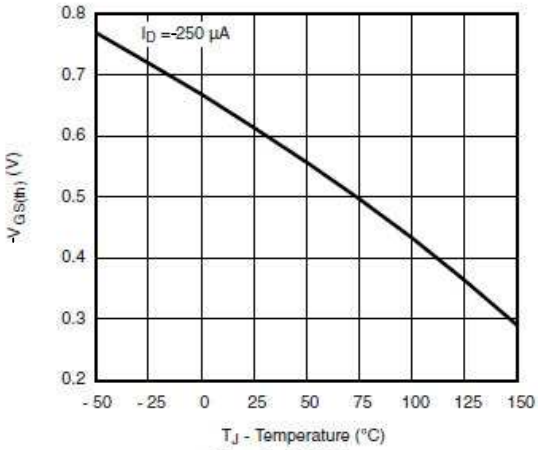

Threshold Voltage

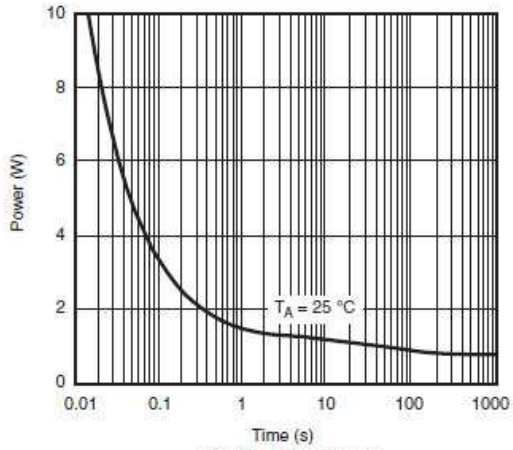

Single Pulse Power

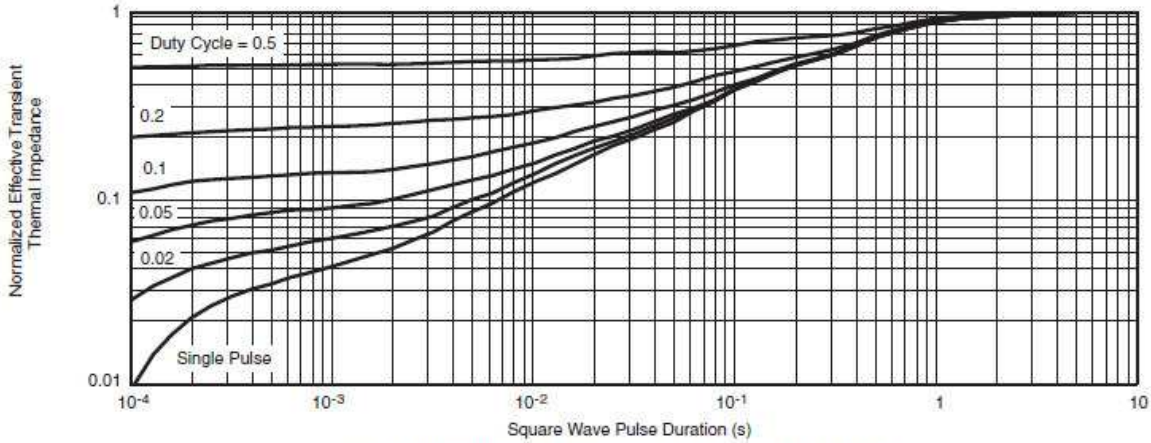

Normalized Thermal Transient Impedance, Junction-to-Foot

Typical Performance Characteristics (continue)

Gate Charge Test Circuit & Waveform

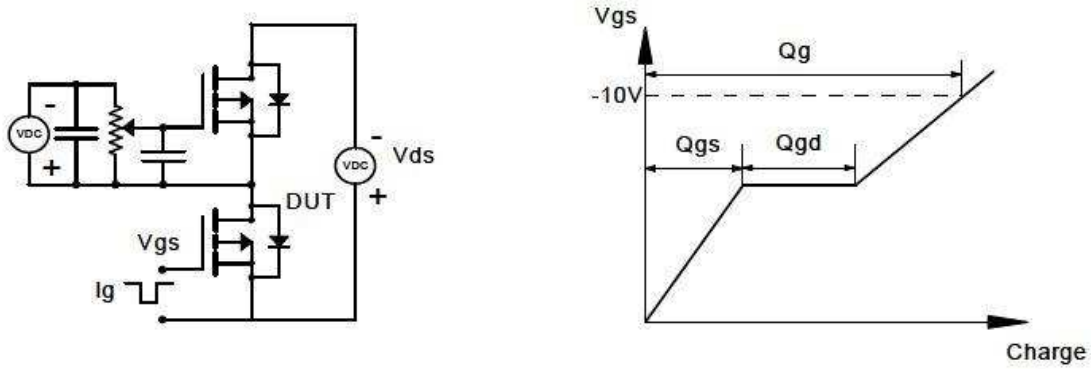

Resistive Switching Test Circuit & Waveforms

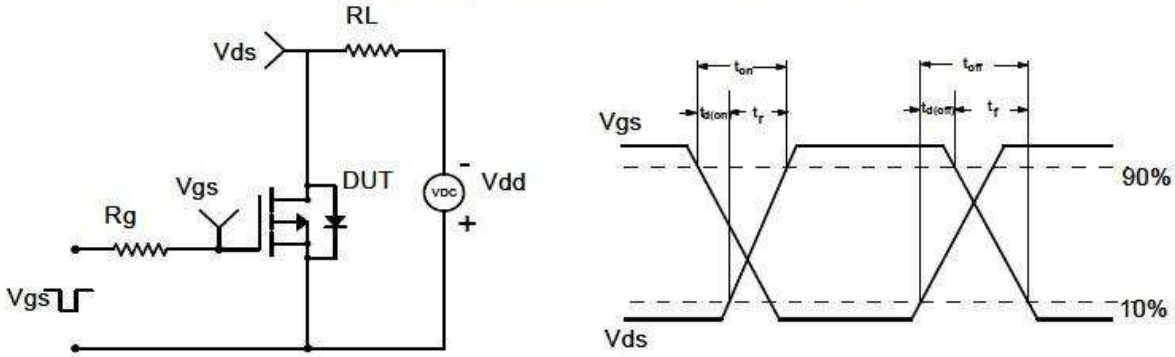

Diode Recovery Test Circuit & Waveforms

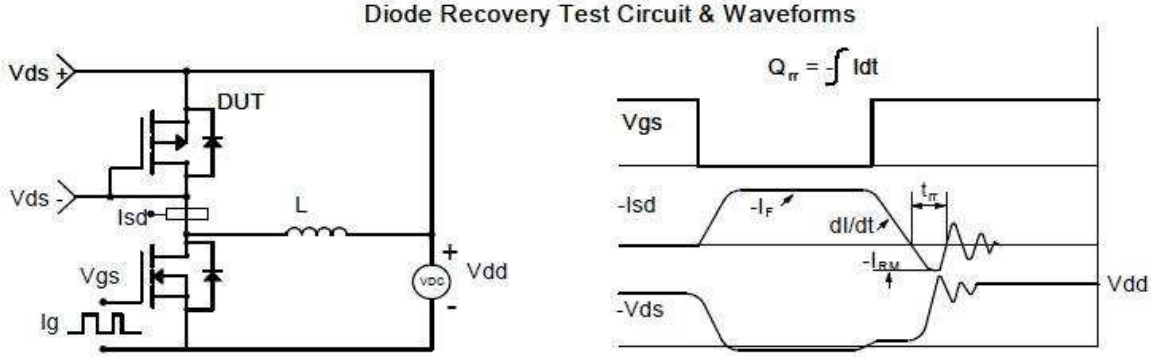

Package Dimension

SOT-23

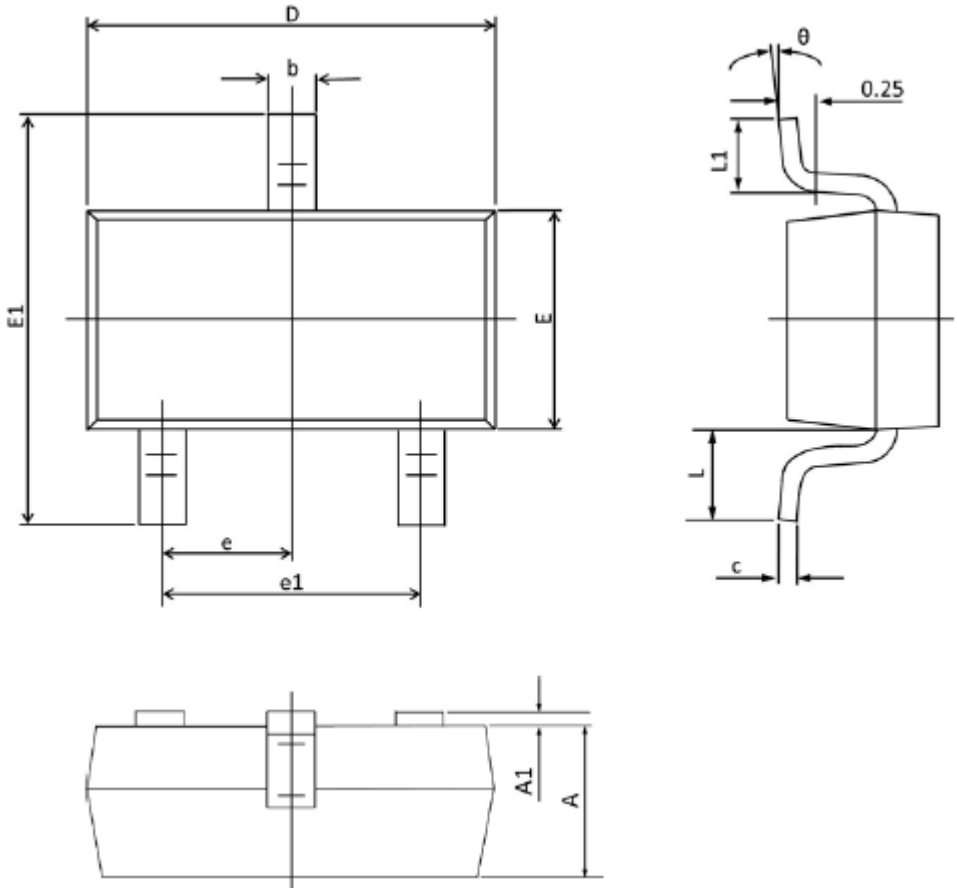

Dimensions				
SYMBOL	Millimeters		Inches	
	MIN	MAX	MIN	MAX
A	0.9	1.105	0.035	0.041
A1	0	0.1	0	0.004
b	0.3	0.5	0.012	0.02
c	0.08	0.15	0.003	0.006
D	2.8	3.0	0.11	0.118
E	1.2	1.4	0.047	0.055
E1	2.25	2.55	0.089	0.1
e	0.95 TYP.		0.037 TYP.	
e1	1.8	2.0	0.071	0.079
L	0.55 REF.		0.022 REF.	
L1	0.3	0.5	0.012	0.02
θ	0°	8°	0°	8°

NOTICE

Information furnished is believed to be accurate and reliable. However Globaltech Semiconductor assumes no responsibility for the consequences of use of such information nor for any infringement of patents or other rights of third parties, which may result from its use. No license is granted by implication or otherwise under any patent or patent rights of Globaltech Semiconductor. Specifications mentioned in this publication are subject to change without notice. This publication supersedes and replaces all information without express written approval of Globaltech Semiconductor.

CONTACT US

GS Headquarter	
	4F.,No.43-1,Lane11,Sec.6,Minquan E.Rd Neihu District Taipei City 114, Taiwan (R.O.C)
	886-2-2657-9980
	886-2-2657-3630
	sales_twn@gs-power.com

RD Division	
	824 Bolton Drive Milpitas. CA. 95035
	1-408-457-0587